DRAWN BY: BILL BERENS

NOTES

1. Concrete shall be class 4000.
2. Installation requirements: Embed barrier 4" (in) minimum in asphalt or concrete to form 6" (in) tall scuppers. Barrier may be embedded deeper and form shorter scuppers. Areas underneath scuppers must be filled, compacted, and graded to match adjacent asphalt or concrete pavement elevations (See contract for details). Install 3/8" (in) Premolded Joint Filler between segments. Fill the connection Blockout with grout, centering the Rebar Grid in the blockout before adding grout.

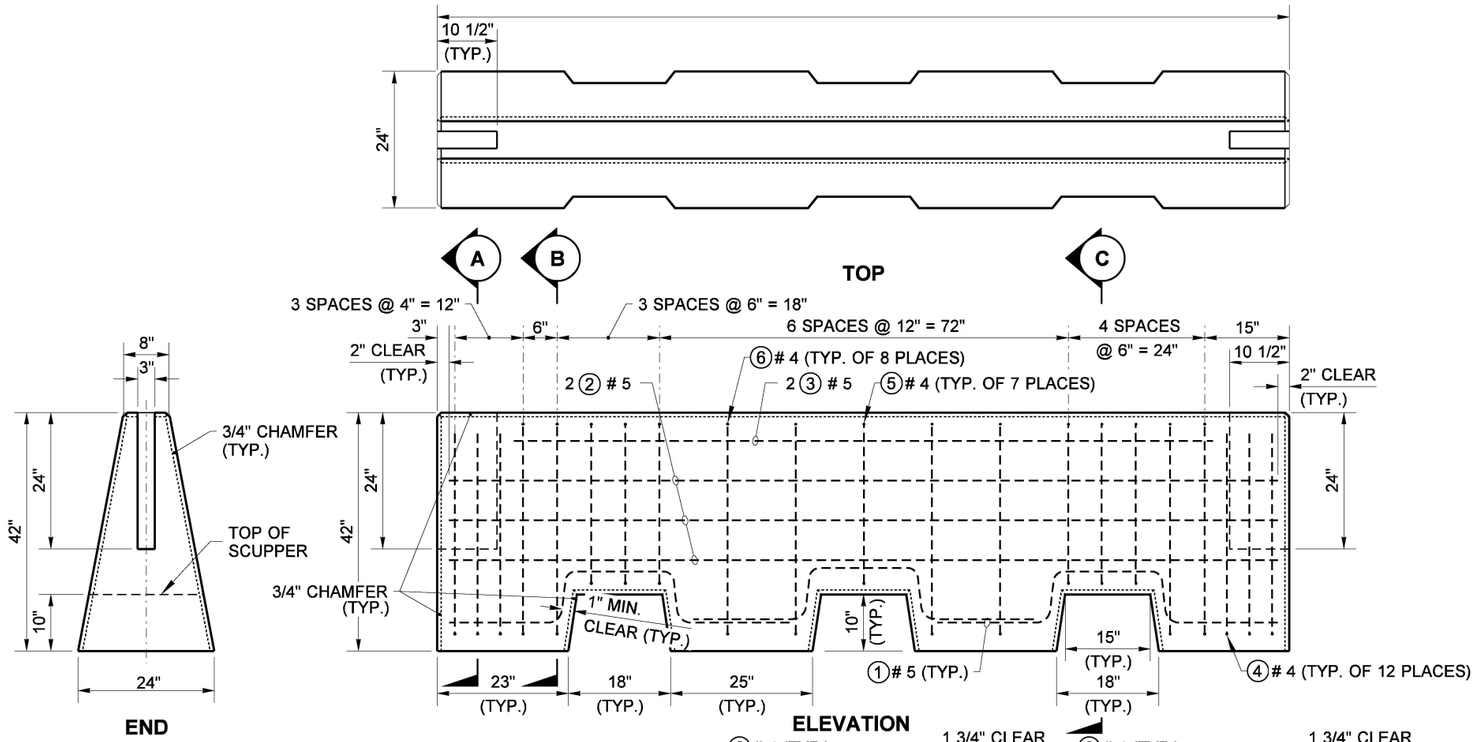

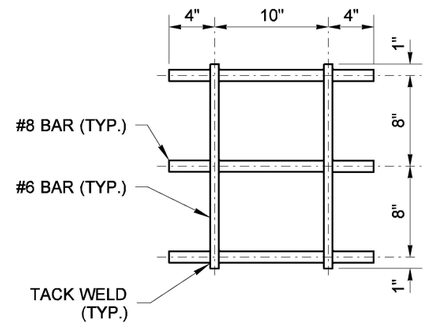

REBAR GRID DETAIL

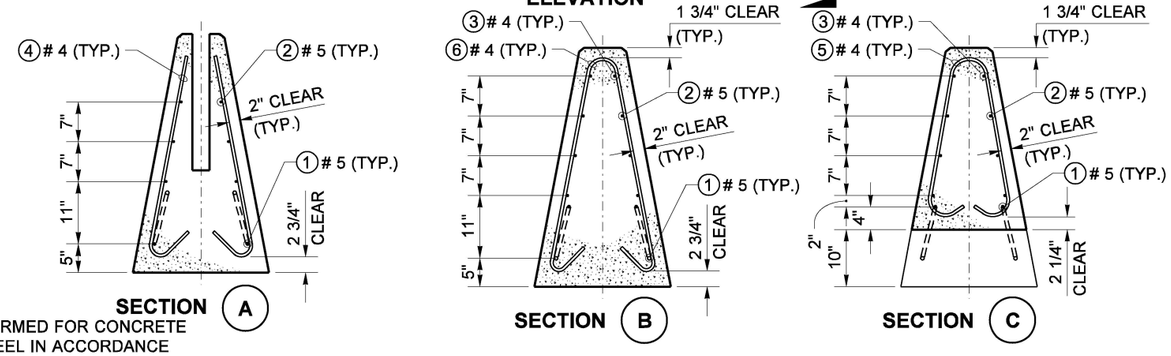

NOTE:
STEEL WELDED WIRE REINFORCEMENT DEFORMED FOR CONCRETE MAY BE SUBSTITUTED FOR REINFORCING STEEL IN ACCORDANCE WITH **STANDARD SPECIFICATION, SECTION 6-10.3**

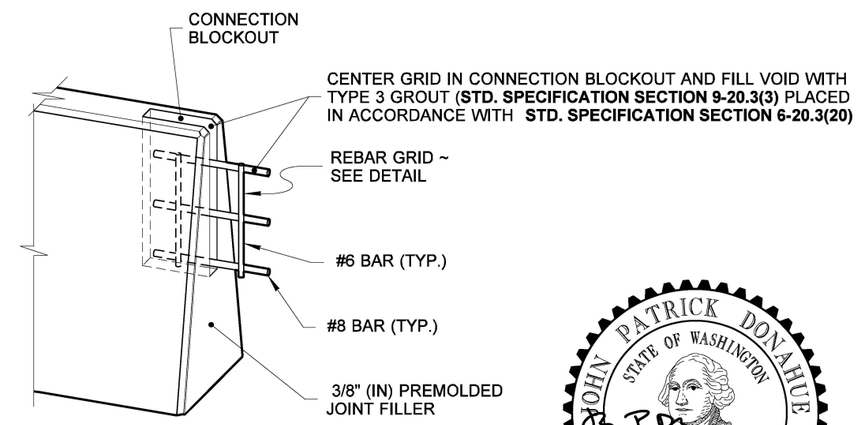

BARRIER CONNECTION DETAIL

REINFORCING STEEL BENDING DIAGRAM

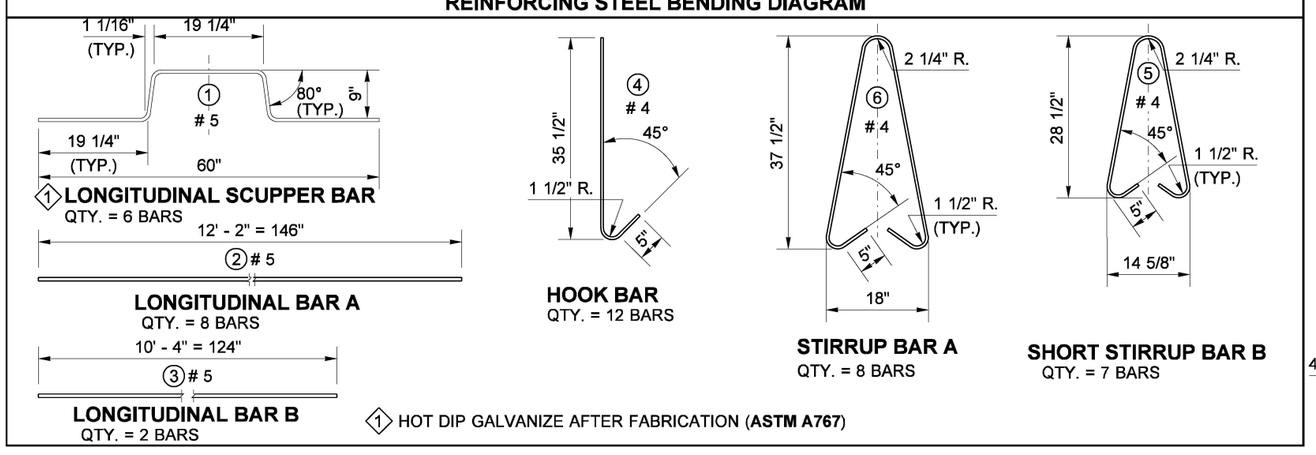

① HOT DIP GALVANIZE AFTER FABRICATION (**ASTM A767**)

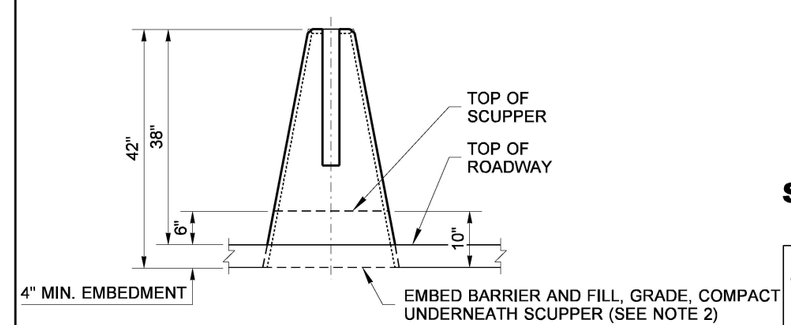

BARRIER - EMBEDMENT DETAIL

John Donahue (Aug 18, 2021 11:33 PDT)

Aug 17, 2021

SINGLE-SLOPE CONCRETE BARRIER WITH SCUPPERS (PRECAST)

STANDARD PLAN C-70.15-00

SHEET 1 OF 1 SHEET

APPROVED FOR PUBLICATION

Aug 17, 2021

STATE DESIGN ENGINEER

Washington State Department of Transportation